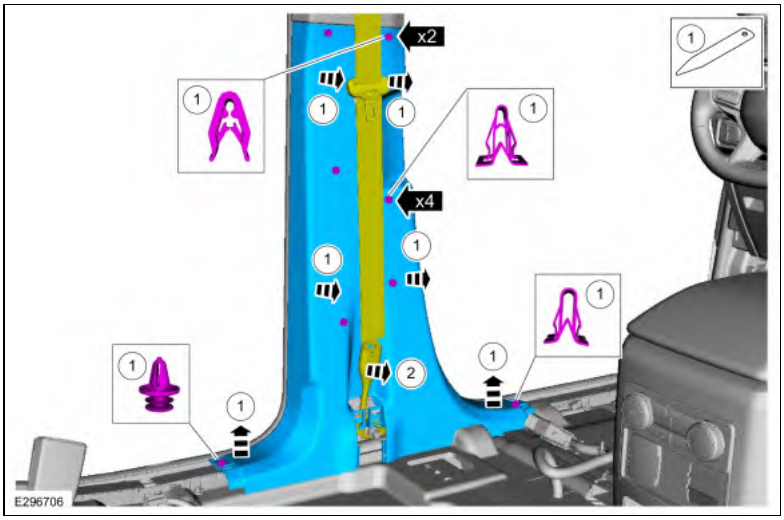

5.
   1. Release the clip
   2. Detach the floor from the main floor and position aside.

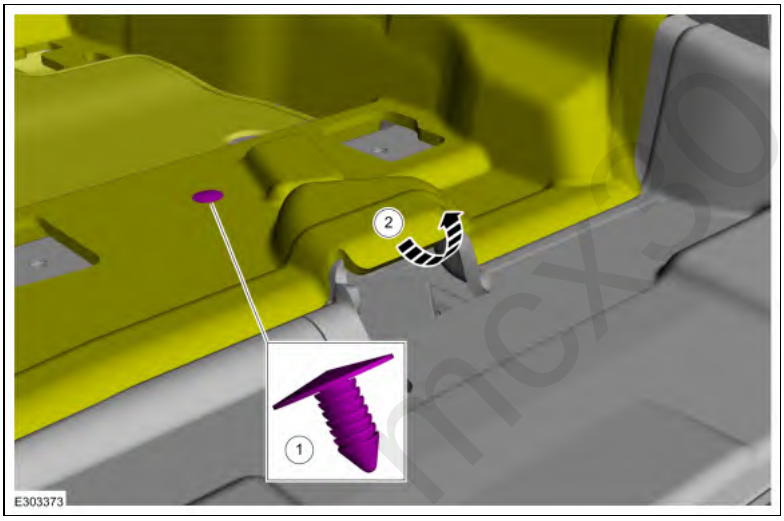

6.
   1. Release the clips
   2. Detach the floor from the main floor and position aside.

mcx30.com